938F
Wheel Loader

Cat® 3116 Engine		
Gross power	111 kW	149 HP
Flywheel power	104 kW	140 HP
Bucket capacities	2.1 to 2.5 m^3	2.75 to 3.25 yd^3
Operating weight	13 030 kg	28,731 lb

938F Wheel Loader

State-of-the-art design and superior quality allow you to maximize productivity.

Engine
Cat 3116 engine is built for performance, durability, serviceability with excellent fuel economy and low emissions. **pg. 4**

Power Train
Automatic power shift transmission provides on-the-go speed and direction changes, while heavy duty axles with enclosed wet disc brakes are designed to provide optimum performance in all kinds of applications and operating environments. **pg. 5**

Traction Control System
Caterpillar® electronic system automatically transfers torque to the wheel with the best traction. *Operates on all four wheels independently and provides the maneuverability of an open differential with the power of a limited slip.* **pg. 5**

Top performance.
Caterpillar high-tech design provides excellent breakout force, fast load and cycle times, and precise maneuvering.

Reliable, durable operation.
Rugged construction and easy maintenance guarantee long life with low operating costs.

Operation Specifications

		General purpose bucket						Penetration bucket	High Lift Arrangement****
Rated bucket capacity	m^3	2.5		2.3			2.1	2.1	same
	yd^3	3.25		3.00			2.75	2.75	same
		Bolt-on edges	**Teeth & segments**	**Bolt-on edges**	**Teeth & segments**	**Bolt-on edges**	**Bolt-on adapter**	**Weld-on adapter**	
Struck capacity	m^3	2.09	2.09	1.99	1.83	1.93	1.93	1.81	same
	yd^3	2.74	2.74	2.60	2.40	2.52	2.52	2.37	same
Width	mm	2706	2740	2740	2706	2740	2740	2773	same
	ft/in	8' 10.5"	9' 0"	9' 0"	8' 10.5"	9' 0"	9' 0"	9' 1"	same
Dump clearance at full	mm	2846	2739	2739	2846	2739	2739	2763	+426.4
lift and 45° discharge**	ft/in	9' 4"	9' 0"	9' 0"	9' 4"	9' 0"	9' 0"	9' 1"	+14.5
Reach at full lift	mm	1004	1106	1106	1004	1106	1106	1192	+67.7
and 45° discharge**	ft/in	3' 3.5"	3' 7.5"	3' 7.5"	3' 3.5"	3' 7.5"	3' 7.5"	3' 11"	+2.7
Reach at 45° discharge and	mm	1501	1550	1550	1501	1550	1550	1458	+348.4
2130 mm (7 ft 0 in) clearance	ft/in	4' 11"	5' 1"	5' 1"	4' 11"	5' 1"	5' 1"	4' 9"	+13.7
Reach with lift arms	mm	2235	2382	2382	2235	2382	2382	2379	+374.5
horizontal and bucket level	ft/in	7' 4"	7' 10"	7' 10"	7' 4"	7' 10"	7' 10"	7' 10"	+14.7
Digging depth	mm	48	48	23	48	48	23	23	-61.3
	in	1.90	1.90	0.90	1.90	1.90	0.90	0.90	-2.4
Overall length**	mm	7281	7439	7439	7281	7439	7439	7414	+472.3
	ft/in	23' 11"	24' 5"	24' 5"	23' 11"	24' 5"	24' 5"	24' 4"	+18.6
Overall height with bucket	mm	5084	5084	5084	4993	4993	4993	4949	+363.7
at full raise	ft/in	16' 8"	16' 8"	16' 8"	16' 5"	16' 5"	16' 5"	16' 3"	+14.3
Loader clearance circle with	m	11.92	12.04	12.04	11.92	12.04	12.04	12.06	+430.0
bucket in carry position	ft/in	39' 1"	39' 6"	39' 6"	39' 1"	39' 6"	39' 6"	39' 7"	+16.9
Static tipping load straight*	kg	10 053	9960	10 136	10 027	9934	10 108	10 017	-1373
	lb	22,167	21,962	22,350	22,110	21,905	22,288	22,088	-3027
Static tipping load	kg	8843	8750	8916	8820	8727	8891	8804	-1241
full 40° turn*	lb	19,499	19,294	19,660	19,448	19,243	19,605	19,413	-2736
Breakout force***	kg	12 326	12 326	13 288	12 326	12 326	13 288	13 288	-558
	lb	27,179	27,179	29,301	27,179	27,179	29,301	29,301	-1230
Operating weight*	kg	13 030	13 110	13 027	13 032	13 112	13 029	13 072	-12
	lb	28,731	28,908	28,725	28,736	28,912	28,729	28,824	-26

Bucket Selection Guide

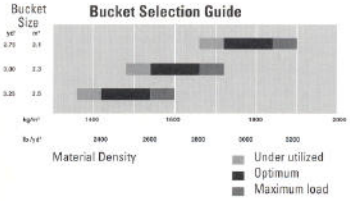

* Static tipping load and operating weight shown are based on standard machine configuration with sound-suppression cab and ROPS, 20.5 R25 XTLA (L-2) tires, full fuel tank, coolant, lubricants and operator.

** Dump clearance, reach and overall length dimensions for bucket equipped with teeth reflect actual dimensions. SAE J732C allows dimensions for bucket with teeth to reflect the dimension using the cutting edge. Caterpillar Inc. uses actual equipped bucket dimensions.

*** Measured 102 mm (4.0"): behind tip of cutting edge with bucket hinge pin as pivot point in accordance with SAE J732C.

**** All buckets shown can be used on the high lift arrangement. High lift column shows changes in specifications from standard lift to high lift. Add or subtract as indicated to or from specifications given for appropriate bucket to calculate high lift specifications.

Dimensions

All dimensions are approximate

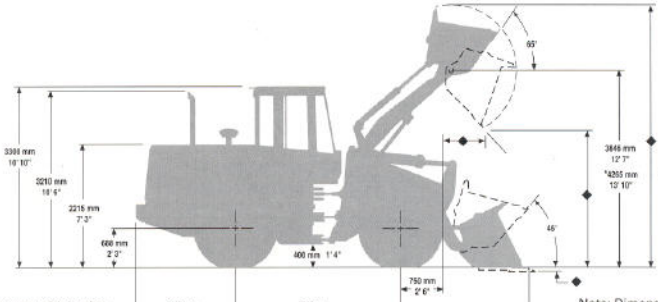

* High Lift

◆ Dimensions vary with bucket. Refer to operating specifications chart on page 14

Note: Dimensions listed are for machines equipped with 20.5 R25 XTLA (L-2) tires.

Tread width for all tires 2090 mm (82")

	Width over tires		Ground clearance		Change in vertical dimensions		Change in operating weight	
	mm	inches	mm	inches	mm	inches	kg	lb
20.5-25 12 PR (L-2)	2607	102.6	401	15.8	1	0.04	-60	-132
20.5-25 12 PR (L-3)	2602	102.4	427	16.8	27	1.06	85	187
20.5 R25 XTLA (L-2)	2601	102.4	400	15.7	—	—	—	—
20.5 R25 GP-2B (L-2/3)	2595	102.2	410	16.1	10	0.39	130	287
20.5 R25 XHA (L-3)	2594	102.1	406	15.9	6	0.24	172	379

Supplemental Specifications

	Change in Operating Weight		Change in Articulated Static Tipping Load	
	kg	lb	kg	lb
Remove cab only, ROPS	-198	-437	-191	-421
20.5-25 12 PR (L-2)	-60	-132	-39	-86
20.5-25 12 PR (L-3)	85	187	56	123
20.5 R25 XTLA (L-2)	—	—	—	—
20.5 R25 GP-2 B (L-2/3)	130	287	86	190
20.5 R25 XHA (L-3)	172	379	114	251

Note: Tire options include tires and rims.

Cab

Caterpillar cab and Rollover Protective Structure (ROPS) are standard in North America, Europe and Japan.

Features

- meets OSHA and MSHA limits for operator and sound exposure with doors and windows closed (according to ANSI/SAE J1166 JUL87)
- ROPS meets the following criteria:
  — SAE J394
  — SAE 1040 APR88
  — ISO 3471-1986
- also meets the following criteria for Falling Objects Protective Structure:
  —SAE J231 JAN81
  —ISO 3449-1984

Note

When properly installed and maintained, the cab offered by Caterpillar when tested with doors and windows closed according to ANSI/SAE J1166 MAY90, meets OSHA and MSHA requirements for operator sound exposure limits in effect at time of manufacture. The operator sound pressure level is 75 dB(A) when measured per ISO 6394 or 86/662/EEC.

Tires

Tubeless, nylon, loader-design tires.

Choice of

- 20.5-25, 12 PR (L-2)
- 20.5-25, 12 PR (L-3)
- 20.5-R25 GP-2B (L-2/3) steel radial
- 20.5-R25 XTLA (L-2) steel radial
- 20.5-R25 XHA (L-3) steel radial

Note

In certain applications (such as load-and-carry work) the loader's productive capabilities might exceed the tires' tonnes-km/h (ton-MPH) capabilities. Caterpillar recommends that you consult a tire supplier to evaluate all conditions before selecting a tire model.

Steering

Full hydraulic power steering.

Ratings

Minimum turning radius (over tire)	5480 mm (18')
Steering angle, each direction	40°
Hydraulic output at 2597 RPM and 6900 kPa (1000 psi)	102 liters/min (27 gpm)
Relief valve setting	22 800 kPa (3306 psi)

Features

- center-point frame articulation
- load sensing hydraulic steering pump
- front and rear wheels track
- flow-amplified, closed-center, pressure-compensated system
- steering-wheel operated metering pump controls flow to steering cylinders
- full-flow filtering
- adjustable steering column

Bucket Controls

Pilot-operated lift and tilt circuits.

Lift circuit features

- four positions: raise, hold, lower and float
- can adjust automatic kickout from horizontal to full lift

Tilt circuit features

- three positions: tilt back, hold and dump
- can adjust automatic bucket positioner to desired loading angle
- doesn't require visual spotting

Controls

- two lever control standard
- three lever control optional

Service Refill Capacities

	Liters	Gallons
Fuel tank	210	55
Cooling system	48	12.7
Crankcase	20	5.3
Transmission	30	7.9
Differentials and final drives		
front	24	6.3
rear	27	7.1
Hydraulic system (including tank)	90	23.8
Hydraulic tank	55	14.5

Axles

Fixed front, oscillating rear (±15°).

Features

- maximum single-wheel rise and fall: 543 mm (21.4")
- differentials, enclosed brakes and final drives included
- threaded nuts to set bearing pre-load
- Duo-Cone Seals between axle and housing
- uses SAE 30W (oil change interval: 2000 hours or 1 year)

Brakes

Meet the following standards: OSHA, SAE J1473 DEC84, ISO 3450-1985.

Service brake features

- full-hydraulic actuated, oil-disc brakes
- completely enclosed and sealed
- adjustment-free
- separate circuits for front and rear axles
- dual pedal braking system with switchable left or right pedal

Parking brake features

- mechanical, shoe-type brake
- mounted on driveshaft
- pull-cable operated

Final Drives

Planetary final drives consist of ring gears and planetary carrier assemblies.

Features

- ring gears are pressed in and doweled to axle housings
- carrier assemblies include:
  - — planet gears with full-floating bronze sleeve bearings
  - — planet shafts
  - — retaining pins
  - — bearings
  - — sun gear shafts
  - — planetary carriers

Loader Hydraulic System

Open-centered, interrupted series system with full-flow filtering. System is completely sealed. Pilot-operated controls.

Implement system, vane-type pump		
Output at 2597 RPM and 6900 kPa (1000 psi) with SAE 10W oil at 66°C (150°F)	163 liters/min	43 gpm
Relief valve setting	24 800 kPa	3600 psi
Cylinders, double acting: lift, bore and stroke	120.7 x 693 mm	4.75 x 27.25"
Cylinder, double acting: tilt, bore and stroke	139.7 x 527 mm	5.5 x 20.75"

Pilot system, vane-type pump		
Output at 2597 RPM and 6900 kPa (1000 psi) with SAE 10W oil at 66°C (150°F)	102 liters/min	27 gpm
Relief valve setting	22 800 kPa	3306 psi

Hydraulic cycle time	seconds
Raise	6.0
Dump	1.4
Lower, empty, float down	2.8
Total	10.2

Features

- completely enclosed system
- low effort, pilot-operated controls
- full-flow filtering
- reusable couplings with O-Ring Face Seals

Engine

Four-stroke cycle, six-cylinder 3116 turbocharged diesel engine.

Ratings at 2200 RPM*	kW	HP
Gross power	111	149
Net power	104	140

The following ratings apply at 2200 RPM when tested under the specified standard conditions for the specified standard:

Net power	kW	HP	PS
Caterpillar	104	140	—
ISO 9249	104	140	—
SAE J1349	103	138	—
EEC 80/1269	104	140	—
DIN 70020	—	—	145

Dimensions

Bore	105 mm	4.13 in
Stroke	127 mm	5.0 in
Displacement	6.6 liters	403 cu in

Exhaust emissions

The 3116 meets the following emissions requirements:

- EEC JAN 1998
- US EPA JAN 1997
- Japan MOC APRIL 1997

	gr/kWh
Hydrocarbons (HC)	0.28
Carbon monoxide (CO)	1.45
Nitrous oxide (N_2O)	6.11

*Power rating conditions

- based on SAE J1349 standard conditions of 25°C (77°F) and 99 kPa (29.32 in Hg) dry barometer
- used 35° API gravity fuel having an LHV of 42 780 kJ/kg (18,390 Btu/lb) when used at 30°C (86°F) [ref. a fuel density of 838.9 g/L (7.001 lb/U.S. gal)]
- net power advertised is the power available at the flywheel when the engine is equipped with fan, alternator, air cleaner, and muffler
- no derating required up to 2550 m (8366 ft) altitude

Features

- direct-injection fuel system with individual adjustment-free unit injectors for cylinders
- 3-ring aluminum-alloy pistons, cam-ground, tapered and cooled by oil spray
- tapered connecting rods
- uniflow cylinder head design with two alloy-steel valves per cylinder
- deep-skirted cast cylinder block
- induction-hardened, forged crankshaft
- oscillating roller-followers
- direct-electric 24-volt starting and charging system with two 12-volt, 100 amp-hour batteries

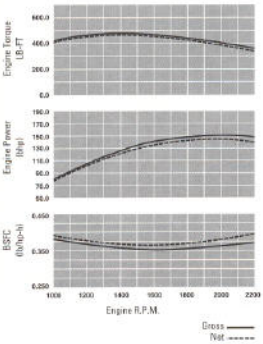

Transmission

Countershaft power shift transmission with four speeds forward and three reverse.

Maximum travel speeds (standard 20.5-25 tires)		km/h	MPH
Forward	1	7.0	4.3
	2	12.7	7.9
	3	22.0	13.7
	4	37.9	23.6
Reverse	1	7.0	4.3
	2	12.7	7.9
	3	22.0	13.7

Features

- single lever to control both speed and direction
- separate control to lock in neutral
- single-stage, single-phase torque converter
- automatic shift capability
- quick gear kickdown button
- F-37 high energy friction material provides long clutch life
- externally mounted controls with quick disconnects for easy in-vehicle checks
- high contact ratio gears are precision ground for quieter operation

Hydraulics

Powerful hydraulics are the invisible force behind the loader's muscle and flexibility.

High capacity lift. Quick hydraulics make it easy to lift heavy, full bucket loads. Pilot control valves reduce operator effort and provide precise bucket control. The bucket automatically returns to a preset lift height and digging angle, which ensures accuracy and cuts down on operator distractions.

Large-bore lift and tilt cylinders ensure efficient load handling.

Cat's XT-3 hydraulic hose is exceptionally strong and flexible.

O-Ring Face Seals provide positive, dry sealing.

Smooth, efficient steering. Load sensing steering maximizes machine performance by directing power through the steering system only when needed. When the machine is not steering, more engine power is available to generate crowd, breakout and lift forces. Load sensing reduces horsepower draw by up to 8%, resulting in increased fuel economy. Large-bore steering cylinders allow excellent maneuverability.

Automatic Ride Control. This Caterpillar system uses a nitrogen-oil accumulator in the hydraulic lift circuit that acts as a shock absorber. Automatic Ride Control System benefits include a more controlled ride, less dynamic stress on structures and components, reduced tire flexing and greater payload retention. Collectively these benefits contribute to improved operator efficiency, lower operating cost and enhanced productivity.

Complete Customer Support

When you buy a Cat machine, you get Caterpillar's total commitment to customer support.

Easy maintenance. In addition to the servicing features built into the engine (see page 4), the 938F includes:

- Hinged doors for access to battery boxes.
- Diagnostic connector to analyze electrical functions quickly.
- Ground-level access to lubrication points.
- Hydraulic pressure taps for checking hydraulic pressures.
- Hinged and removable doors for access to engine.
- Removable floor plate in the cab provides for transmission control valve access.

Cat dealers are also available to help you manage your machine service. Ask about our preventive maintenance programs.

Parts availability. Most Cat parts are immediately available from any dealer. Cat dealers rely on our worldwide computer network to find parts instantly and minimize your machine downtime. Many components are economically available as Caterpillar Remanufactured parts.

Flexible financing. Your dealer can arrange affordable financing for the entire Caterpillar line. Talk to your dealer to learn how terms can be structured to meet your cash flow requirements.

Buckets

Seven buckets are available, allowing you tailor the machine to the job.

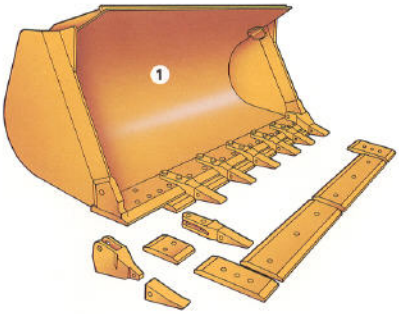

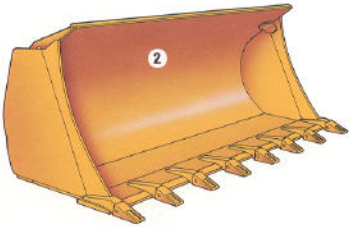

Rugged design. All buckets are built with shell-tine construction that resists twisting and distortion. Replaceable, bolt-on wear plates protect the bucket bottom. Patented Cat Corner Guard Cutting Edge System protects the corners for long-term wear.

General purpose buckets — excellent for excavating, stockpiling and general purpose work — feature:

- Bolt-on wear plates
- Sloped floor
- Straight, sharp sidebar

Penetration buckets— excellent for site preparation work— feature:

- Full-width backdrag edge
- Fore/aft wear strips
- Flat floor
- Curved, sharp sidebar

1 **General purpose buckets** are available with teeth, teeth and segments or reversible cutting edges. All options bolt on.

2 **Penetration buckets** are the right choice for moderate breakout force. The flush-mount teeth are welded on.

Tooth Options

Flush Mount

Bottom Strap

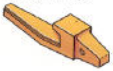

Two Strap
Two Bolt

Unitooth

Tip Options

Short

Long

Abrasion

Penetration

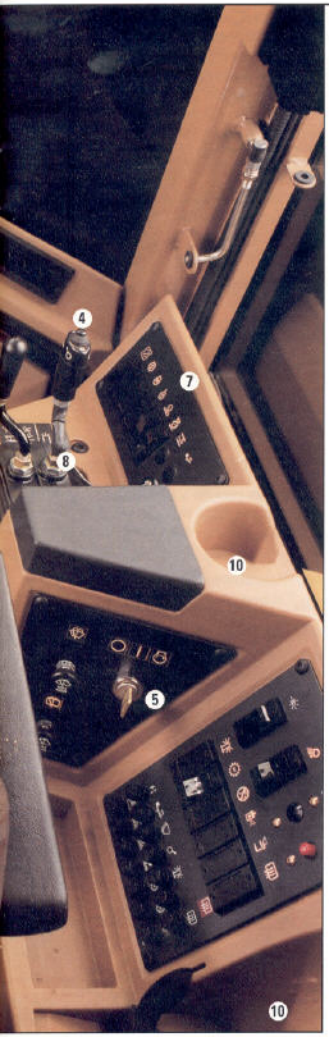

1 **Exceptional all-around visibility** reduces strain and fatigue, making operators more productive.

2 **Caterpillar Monitoring System** with electronic analog gauges is a highly effective and reliable warning and diagnostic system. As a warning system, it constantly checks machine functions and tells the operator when there's a problem. Easy-to-read gauges display fuel level, temperatures for engine coolant, transmission and hydraulic oil, engine RPM and gear range. Also displays hour meter, odometer and optional digital speedometer/tachometer readings. As a diagnostic system, it identifies conditions, shows current readings and plays back maximum or highest readings registered during recent operations.

3 **Automatic shift control** allows the operator to concentrate on the work, not gear selection. Preset factory shift points ensure each shift occurs at optimum torque. A switch allows the operator to select either automatic or manual shifting. The low-effort shift control allows one-hand shifting for speed or directional changes.

4 **Quick Gear Kickdown Button** lets the operator easily downshift to a lower gear. It's a convenient way to downshift that saves time, increases bucket fill factors and lowers cycle times.

5 **Ignition key start/stop switch** positioned for easy machine starting and stopping.

6 **Steering column** adjusts to multiple positions. The leather-like steering wheel and transmission control provide a sure grip and comfortable feel. The horn is conveniently located in the center of the steering wheel.

7 **Transmission neutralizer lockout switch** enables the left or right brake pedal to be used as a brake/neutralizer or brake only. Switch is on the right hand console.

8 **Convenient pilot-operated bucket controls** allow for precise bucket loading and dumping. Optional third valve and single lever control are available.

9 **New Contour Seat** is designed for comfort and support. Seat cushions reduce pressure on the lower back and thighs while allowing unrestricted arm and leg movement.

10 **Built-in storage space** is designed to hold cups, lunch box, thermos and personal items.

11 **Repositioned vents** throughout the cab keep fresh air flowing while improving the cab's heating, cooling, defrost and defog capability.

Radio Ready means this cab includes 12-volt converter (2-amp), speakers, antenna, all wiring and brackets for entertainment or communications radio installation.

Windshield washers/wipers with in-the-blade washer delivery system are standard features on front and rear windows. Front wiper has intermittent speed capability.

Operator's Station

Comfort and control — top-quality operator's station will help maximize productivity.

Power Train

The Cat power train makes dependable performance a standard feature.

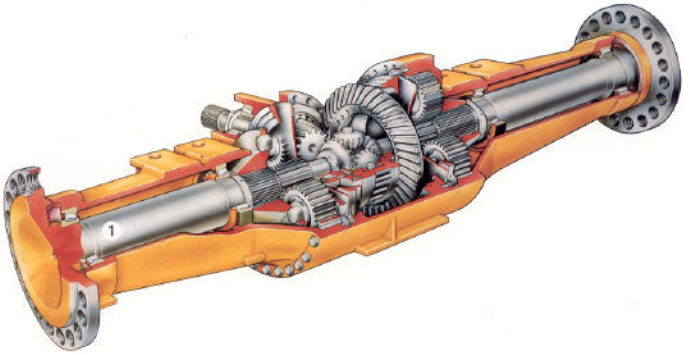

1 Heavy duty axles and brakes are designed to last in all kinds of operating conditions. Planetary final drives use full-floating bronze sleeve bearings in the planet gears and differential pinion. Oil-disc brakes are adjustment free and fully enclosed to lock out contaminants. Patented Duo-Cone Seals between the axle shafts and housings keep lubrication in and dirt out. Oscillating rear axle ensures four-wheel ground contact for traction and stability, even on rugged terrain.

Power shift transmission with automatic shift capability is designed, developed and built by Caterpillar. The electronically controlled powershift transmission allows full-power speed and directional changes. Its fully modulated shifts increase component life, productivity and reduce operator fatigue.

2 Optional Traction Control System is a state-of-the-art Caterpillar electronic system. Sensors (A) measure axle shaft rotation and vehicle articulation (B). When a tire slips, the system applies the service brake and torque is transferred through the differential to the wheel with the better traction, whether traveling straight ahead or turning. An energy management system monitors brake energy and protects the brake system by automatically reducing brake pressure as needed. The system operates on all four wheels independently, providing the maneuverability of an open differential and the power of a limited slip.

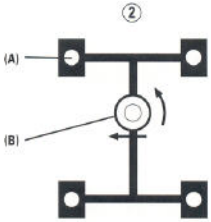

3116 Engine

The six-cylinder, turbocharged engine is built for power, reliability, economy and low emissions.

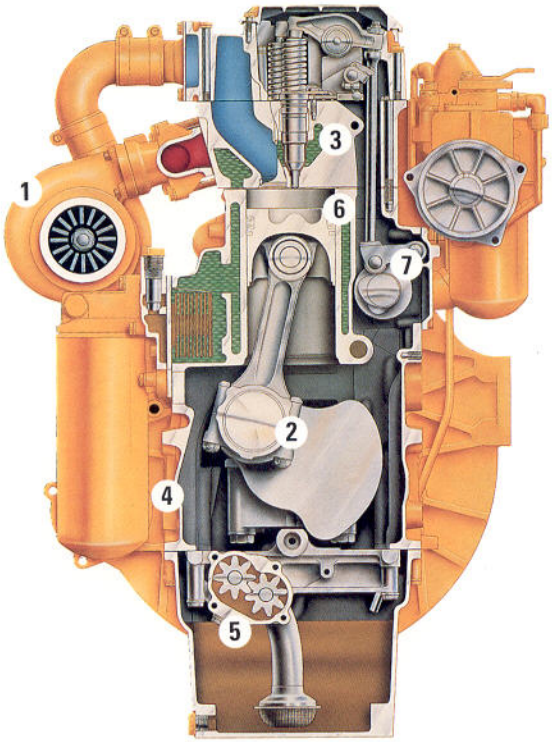

Powerful performance. The 938F performs at full-rated gross power of 111 kW (149 hp). The four-stroke cycle design delivers long power strokes and efficient fuel combustion with low emissions. The turbocharged Caterpillar 3116 engine is precisely engineered and stringently tested to maintain a tradition of quality. It does it all with profit-boosting performance, heavy duty durability and reliability, built-in serviceability and excellent fuel economy.

1 **Turbocharger** enhances performance and engine efficiency, especially at high altitudes.

2 **Crankshaft** is forged and induction hardened for long-term durability.

3 **Individual, high-pressure unit injectors** atomize fuel efficiently for economy and low emissions.

4 **Deep skirt designed block**

5 **Low mounted oil pump**

6 **Silicon aluminum alloy pistons**

7 **Camshaft roller followers**

Modular radiator cools efficiently. Grill swings out for easy repair or installation of individual modules, and sight gauge allows for quick check of coolant level.

Easy maintenance. The engine can be rebuilt for a second life. Caterpillar remanufactured parts are available to economically replace many components. Some innovative maintenance features of the 3116 engine:

- Parent-metal cylinder block can be rebored twice and dry-sleeved.
- Connecting rods can be removed through the tops of the cylinders.
- Camshaft followers and pushrods can be easily replaced without removing the camshaft.
- Water pump can be serviced as a unit or rebuilt.

Operator's Station

Ergonomically designed for total machine control in a comfortable, roomy environment. All control levers, switches and gauges are positioned to maximize productivity. *Easy to see and* ✔ *read Caterpillar Monitoring System features electronic analog gauges. Automatic transmission with quick gear kickdown capability optimizes production.* **pg. 6-7**

Buckets

Wide selection of general purpose and penetration buckets — along with various tooth and tip options — allows you to match the machine to the job. **pg. 8**

Hydraulics

Powerful Caterpillar hydraulics provide strength and versatility for various applications, giving the 938F exceptional lift capacity and load handling. *Load sensing steering* ✔ *supplies power only when it's needed. Pilot controlled hydraulic valves reduce operator effort and provide precise bucket control.* **pg. 9**

✔ *New feature*

Standard Equipment

Standard equipment may vary. Consult your Caterpillar dealer for specifics.

Alternator (50-amp)
Automatic bucket positioner
Automatic lift kickout
Back up alarm
Batteries (two 12-volt, 100 amp-hour)
Brakes, full hydraulic, enclosed wet-disc
Cab with sound suppression, canopy and rollover protective structure (ROPS)
Caterpillar Monitoring System
Coolers (engine oil and transmission oil)
Counterweight
Diagnostic connector
Drawbar hitch with pin
Engine enclosure, locking
Fenders, front and rear
Gauges (engine coolant, transmission and hydraulic oil temperature, fuel level, digital tachometer and gear range indicator)
Heater/defroster/pressurizer
Horn, electric
Indicators (engine air filter and hour meter)
Key (single key for cab and access doors)
Lights (front and rear), Halogen
Lock (hydraulic implement control levers)
Muffler
Radiator, multi-row modular
Rearview mirrors, interior
Seat, contour (fully adjustable)
Seat belt, retractable, 75 mm (3") wide
Sight gauge (for engine coolant and hydraulic tank)
Starting and charging system (24-volt)
Tires (see page 13)
Tool box (lockable)
Windshield washers/wipers, wet-arm (front and rear), front intermittent

Optional Equipment

With approximate changes in operating weights.
Optional equipment may vary. Consult your Caterpillar dealer for specifics.

	kg	lb
Air conditioning (R134a refrigerant)	73	161
Buckets		see page 14
Cab removed, ROPS remains	-198	-437
Differentials:		
NoSPIN (rear only)	2	5
Limited Slip (front and rear)	8	18
Field installed attachments:		
Guard, power train	83	183
Engine coolant heater, 120-volt, 220-volt		
Lighting system, warning (rotating beacon)		
Mirrors, outside mounted		
Emergency starting receptacle		
Radio, AM/FM cassette in fixed mounting or quick release versions		
Voltage converter, 5-amp, 15-25 amp		

	kg	lb
Hydraulic oil cooling package	56	123
Hydraulic arrangement, three valve	56	123
Mirrors, outside mounted	28	62
Ride Control System	22	49
Seat, air suspension	40	88
Signal lights, directional	8	18
Starting aids:		
Air intake heater	5	12
Engine coolant heater, 120-volt	1.4	3
Ether starting aid	1	2
Receptacle, 120-volt, 220-volt	3	7
Steering, supplemental	50	110
Traction Control System		